Innogreen

COMPANY PR ILE

CORPORATE MISSION: LEAD TH NDUSTRY THROUGH INNOVATION, IMPROVE LIVES THROUGH PRODUCTS, EMPOWER EMPLOYEES THROUG SPACE, AND GIVE BACK TO SOCIETY THROUGH EFFICIENCY.

Beijing Innogreen Technology Co.,Ltd, founded in 2004 and headquartered in Beijing, is a new type of environmental protection enterprise in China. The company integrates the R&D and manufacturing of membrane products and water treatment products, the design and implementation of water treatment systems, engineering installation and services,water treatment operation and maintenance services, technical consulting, and water investment & operation into one comprehensive platform.

Innogreen is a national high-tech enterprise and a National "Little Giant"Enterprise for Specialized, Refined, Differentiated, and Innovative Development. It holds over 60 national patents and software copyrights, possesses full-project BIM3D modeling design capabilities, and operates the largest environmental equipment manufacturing base in northern China, covering 270 mu with a construction area of 140,000 m. The base functions as a one-stop manufacturing hub for water treatment products, equipped with over 400 sets of advanced domestic and international production equipment. The company also owns a 1,500 m² in-house water quality testing center, equipped with over 80 sets of advanced testing instruments, capable of performing over 100 types of water and environmental parameter tests. Innogreen has developed a Smart Cloud Construction Site Management Platform, enabling comprehensive safety, progress , material, and civilized construction management throughout the full construction cycle of all ongoing projects.

Innogreen has established the Jinan Environmental Design Institute, the Shenyang Technology Center, and branch offices in Shijiazhuang,Wuhan, Ganzhou, Chongqing, and other cities, with a professional team of 700 employees. Business Scope includes: Industrial water treatment for petrochemical, coal mining, and metallurgical industries,Municipal water supply and wastewater treatment, Reclaimed water reuse and wastewater resource recovery,Zero Liquid Discharge (ZLD) systems, Landfill leachate treatment, Water treatment operation and maintenance services, Commercial purified water treatment, Membrane product manufacturing,Water investment and operation Innogreen is a comprehensive water engineering platform that covers the entire spectrum of water treatment services, offering one-stop solutions to address all water-related challenges.

Over 30

PROFESSIONAL QUALIFICATIONS AND CERTIFICATIONS

- General Contracting Qualification for Municipal Projects
- General Contracting Qualification for Intelligent Building Systems
- Specialized Contracting Qualification for Environmental Protection Projects

Over 400 Sets

ADVANCED DOMESTIC AND INTERNATIONAL MANUFACTURING EQUIPMENT

- CNC Laser Cutting Machines
- CNC Wire Cutting Machines
- CNC Hydraulic Turret Punch Presses
- Robotic Welding Systems
- CNC Hydraulic Press Brakes
- .....

700+

PROFESSIONAL STAFF, ONE-STOP SERVICES

- 80% technical professionals
- All senior management with experience in multinationalor large-scale enterprises
- 70% with bachelor's degree or higher

140,000 m²

ENVIRONMENTAL EQUIPMENT MANUFACTURING FACILITIES

- 11 dedicated production workshops
- One-stop product manufacturing enterprise

20+

YEARS OF EXCELLENCE

- Founded in 2004
- Member of Zhongguancun Science Park
- National High-Tech Enterprise
- "Little Giant" Enterprise for Specialized Innovation
- Industry leader in membrane-based water purification

Over 80 Sets

ADVANCED TESTING EQUIPMENT

- In-house Water Quality Testing Center
- Testing for Over 100 Water and Environmental Parameters

Over 60

ADVANCED TESTING EQUIPMENT

- MBR(Membrane Bioreactor)
- High Desalination RO
- Mobile Emergency Water Supply
- Zero Liquid Discharge of Wastewater
- Acid and Brine Wastewater Treatment
- Lithium Extraction from Salt Lakes
- Various Control System Copyrights

3 R&D

CENTERS

- Beijing, Jinan, Shenyang
- Supported by regional branches in Shijiazhuang, Wuhan, Ganzhou, Chongqing, and more

4 Core

BUSINESS AREAS

- Water Treatment Engineering
- Water Treatment Operation & Maintenance
- Leachate Treatment
- Purified Water Products

5

INTERNATIONAL STRATEGIC PARTNERS

- DuPont
- Toray
- IHUAA
- Xpure
- .....

COMPANY HISTORY

Company Founded

- Established in Zhongguancun, Beijing
- Completed construction of the first production workshop in Beijing

Expansion into Wastewater Sector

- Established divisions for residential terminal purification, industrial ultrapure water, softened water, laboratory ultrapure water, and EDI systems
- Founded the Wastewater Division
- Received investment from Legend Capital and Legend Star
- Constructed China's second-largest nanofiltration system in Xilinhot

Top Three in Membrane-Based Water Treatment

- Served over 1,000 clients
- Became No.1 in water treatment for the waste ncineration and biomass power generation industries
- Annual usage of over 30,000 RO membrane elements
- Strategic partnerships with Toray and DuPont Built the largest dual-membrane system in northern China

Industry Integration andShared Growth

- Integrated the four major business segments of the group
- Chairman recognized as a Key Influencer in Rural Water Environment in 2021
- Participated projects awarded the National Quality Engineering Award
- Visited by China's Vice Premier and Governor of Liaoning Province

Industry Leader in Water Purifiers

- Became the largest manufacturer of purified water equipment in northern China
- Designated supplier of purified water equipment for the Beijing Olympic logistical services
- One of the first companies to donate water purification equipment for the Wenchuan Earthquake relief
- Recognized as one of China's Top Ten Water Purifier Brands

Leap in Capital Development

- Signed strategic agreement with listed company Kerong Environment
- Launched the first BOT project
- Implemented the first PPP operation project
- Constructed the Koubei Water Project

Solidifying Sustainable Development in Manufacturing

- Established the largest one-stop environmental protection base in northern China
- Founded the New Business Development Center
- Expanded into post-service segments of water treatment engineering
- Entered the rural environmental management market

The Overseas Business Having Taken Initial Shape

- The Group launched a new 10-year strategic layout.
- Signed a photovoltaic green hydrogen production-project with Longi for Australian Gas Infrastructure Group (AGIG).
- Successively signed multiple overseas projects in Russia, the United Arab Emirates, Uzbekistan, Kazakhstan, Indonesia, etc.
- Successfully won the bid for the Huajin Aramco 3250T/H condensate polishing system (the most well known domestic project with the largest water treatment capacity in 2024).

QUALIFICATION &HONORS

- National “Little Giant” Enterprise for Specialized, Refined, Differentiated, and Innovative Development
- Construction Enterprise Qualification Certificate
- Provincial-Level Enterprise Technology Center
- National High-Tech Enterprise
- Sinopec Credit Certificate

National “Little Giant” Enterprise

National High-Tech Enterprise

Provincial-Level Enterprise Technology Center

Sinopec Credit Certificate

Construction Enterprise Qualification Certificate

We focus on the quality, environmental performance, and safety of our products and services.

- General Contracting Qualification for Municipal Public Works
- Specialized Contracting Qualification for Building Mechanical & Electrical Installation
- Specialized Contracting Qualification for Environmental Protection Engineering

TECHNOLOGY AND R&D

Three Major Technical Centers

Beijing R&D Center

Jinan Environmental Engineering Design Institute

Shenyang Technical Center

University-Enterprise and International Collaboration

The company has established close R&D cooperation with institutions such as the Chinese Academy of Sciences, Tsinghua University, China Agricultural University, and the University of Science and Technology Beijing. It has also established a Technology Industrialization Promotion Base and a Graduate Training Base within its production site under the Water Environment Industry Research Institute.At the international level, Innogreen is a strategic partner of DuPont China and Toray China, working together to implement globally advanced environmental governance technologies.

University-Enterprise Collaboration

Strategic Partner of Toray China

Strategic Partner of DuPont China

International Collaboration

In-House Testing Center

To support product development and customer service, the company has established its own testing center, equipped with over 80 sets of advanced testing instruments. It is capable of performing over 100 types of water quality and environmental parameter tests, and provides these services free of charge to customers

General Physicochemical Parameters Testing Room

Routine Ion Testing Room

Metal Parameters Testing Room

Microbiological Parameters Testing Room

EQUIPMENT MANUFACTURING

Production Workshop On-Site Photos

CNC Laser Cutting Machine

BUSINESS AREA WATER TREATMENT ENGINEERING

China Chemical Engineering Sixth Construction Co., Ltd.

PT.SULAWESI NICKEL COBALT 3×1,000,000 Tons Sulfur based Sulfuric Acid Plant EPC Project -Chemical Water System

Capacity:2×280t/h
Process:Multimedia Filter+Ultrafiltration+Singlestage RO+Mixed Bed

SEPCOIII Electric Power Construction Co., Ltd.

EuroChem Chemical Complex Project -SAP Project Demineralized and Industrial Water Station and sand filter

Capacity:2×70t/h
Process:Multimedia Filter+Activated Carbon Filter+Double-stage RO+EDI

SEPCOIII Electric Power Construction Co., Ltd.

Uzbekistan Surkhandarya 1600MW Combined Cycle Natural Gas-fired (CCGT) Power Plant Water Treatment Equipment

Capacity:2×23t/h
Process:Flocculation Inclined Plate Sedimentation Tank+Multimedia Filter+Activated Carbon Filter+Ultrafiltration+Double-stage RO+EDI

SEPCOIII Electric Power Construction Co., Ltd.

Qatar Peaking Units Project
Water Treatment Plant & Wastewater Treatment Plant

Capacity:2×40t/h+2×0.2t/h
Process:Multimedia Filter+Activated Carbon Filter+Ultrafiltration+Double-stage RO+EDI

Russia KS-TECH Coking Project - Deionized Water Station Complete Equipment

Capacity:3×60t/h
Process:Multimedia Filter+Single-stage RO+EDI

Pure Water Unit

Capacity:2×3t/h
Process:Multimedia Filter+Activated Carbon Filter+Double-stage RO+EDI

SELECTED PROJECT CASES

North Huajin United Petrochemical Co., Ltd.

Fine Chemicals and Raw Materials Project - Condensate Water Station Complete Equipment

Capacity:2500t/h+750t/h
Process: Utility Engineering Area: Primary Filter+Secondary Filter+Activated Carbon Filter+Prepositive Cation Bed+Mixed Bed
Refining Area: Primary Filter+Secondary Filter+Activated Carbon Composite Filter+Prepositive Cation Bed+Mixed Bed

Jinfeng Green Energy Chemical (Xing'an League) Co., Ltd.

Green Hydrogen to 500,000 Tons Green Methanol Project (Phase I: 250,000 Tons)

Capacity:2×130t/h
Process:Multimedia Filter+Ultrafiltration+Double-stage RO+EDI

Green Hydrogen-Ammonia-Alcohol Integration EPC Project - Demineralized Water Preparation System Equipment

Capacity:2×65t/h
Process:Multimedia Filter+Ultrafiltration+Double-stage RO+EDI

Green Hydrogen Demonstration Project Material Procurement

Capacity:60t/h
Prog P9.55e27 ()-7.6 a5-(g)-3.4.2 ()-4.2gen Demonstration Project Mate4P9.55e229-67.8 L31.2 (.2 (n83 79-7.5 (gi)6.5(h)]T13.2 (a)-8.d20.005p1 (

BUSINESS AREA WATER TREATMENT ENGINEERING

Municipal Drinking Water Projects

Advanced Purifica on Process for Raw Water Contaminated with Trace Organic Pollutants

Applicable Condions: When all other indicators in the raw water meet or exceed Class III of the Environmental Quality Standards for Surface Water (GB3838-2002) except for organic pollutants, this advanced treatment soluon has been tested and validated for effecveness.

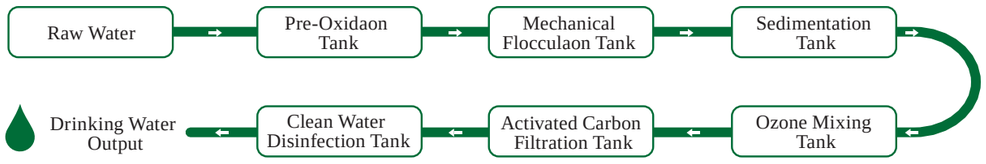

Dual-Membrane Process for Ion-Exceeding RawWater in Drinking Water Plants

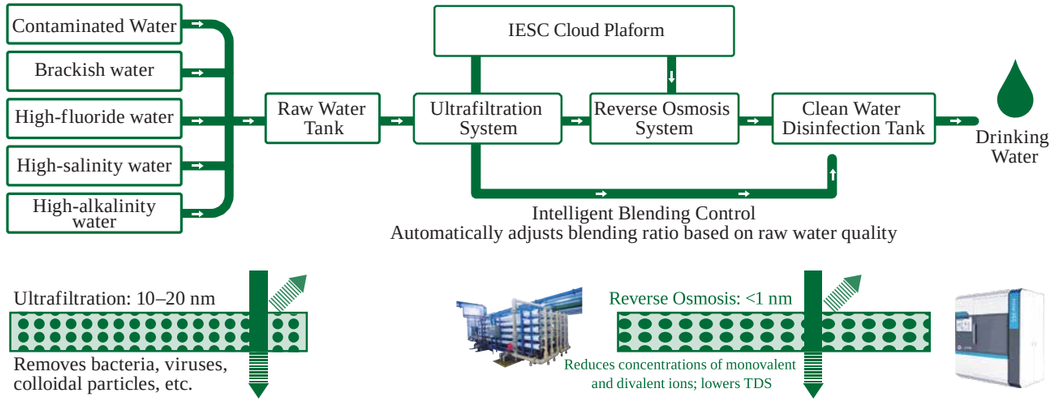

SELECTED PROJECT CASES

Koubei Water Plant, Chaoyang, Liaoning

Treatment Capacity: 20,000 m³/day
Core Process: Ultrafiltration 6 × 189 t/h + Reverse Osmosis 6 × 142 t/h

Xilinhot Municipal Water Plant

Treatment Capacity: 33,600 m³/day
Core Process: Pretreatment + Nanofiltration

Rongcheng Water Plant, Xiong'an

Treatment Capacity: 25,000 m³/day
Core Process: Inclined Plate Reactor + Horizontal Flow Sedimentation Tank + Dissolved Air Flotation Tank + Submerged Ultrafiltration Membrane Tank + Disinfection

Woniushan Water Plant, Yantai, Shandong

Treatment Capacity: 67,000 m³/day
Core Process: Ultrafiltration + Reverse Osmosis

Zhiyang Water Plant, Fushan District, Yantai

Treatment Capacity: 12,000 m³/day
Core Process: Ultrafiltration + Reverse Osmosis

BUSINESS AREA
WATER TREATMENT ENGINEERING

BUSINESS AREA Water Treatment Engineering

Process Flow:

Application Areas:
Municipal reclaimed water, industrial park reclaimed water

Miyun District Urban Management Committee, Beijing (Reclaimed and Wastewater Treatment Project)

Capacity: 100 t/h + 35 t/h + 2 × 12 t/h
Process: Ultrafiltration + Reverse Osmosis

Yanggu Senquan Water Plant Co., Ltd. – Wetland Reclaimed Water Reuse Project

Capacity: 20,000 t/d
Process: Ultrafiltration + Reverse Osmosis

Ningdong Base – Nanhu Reclaimed Water Treatment

Capacity: 38,400 t/d
Process: Ozone Oxidation + Chemical Softening & Sedimentation + V-shaped Filter + Ultrafiltration + Reverse Osmosis

Qinghai Kunlun Gold Refinery – Reclaimed Water Reuse Project

Capacity: 8,000 t/d
Process: V-shaped Filter + Ultrafiltration + Reverse Osmosis

Panjin Solid Waste Comprehensive Treatment Park – Reclaimed Water System Project

Capacity: 6,240 t/d
Process: PCF + Ultrafiltration + Reverse Osmosis

BUSINESS AREA
WATER TREATMENT ENGINEERING

Water Treatment Engineering

Selected Project Cases
Alar, 11th Regiment of the 1st Division, Xinjiang

Brackish Water Desalination Project

Capacity: 10,000 t/d
Process: High-Density Settling Tank + V-shaped Filter + Mechanical Filtration + High-Pressure Reverse Osmosis

Mozambique Seawater Desalination Project

Capacity: 1,000 t/d
Process: Ultrafiltration + Reverse Osmosis

Peru Seawater Desalination Project

Capacity: 1,000 t/d
Process: Water Intake System + Oil Removal + Filtration + Seawater RO Membrane System

BUSINESS AREA
WATER TREATMENT ENGINEERING

Mine Water Treatment

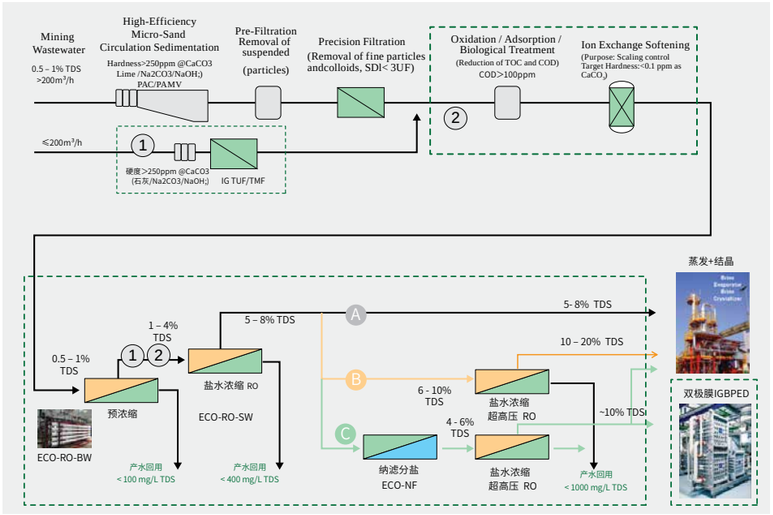

CORE TECHNOLOGIES

- IG-TUF/TMF Direct Filtration Technology
- ECO Series Membrane Separation Technology
- IG-BPED Mixed Salt Resource Recovery Technology
- High-Speed Settling with Micro-Sand Circulation Technology

Case Study: A Coal Mine of Shendong Group
Mine Water Treatment Plant Renovation and Expansion Project

Before Renovation

- Design Capacity: Q = 400 m³/h
- Actual Operating Capacity: Q = 200 m³/h
- Process: Inclined Tube Sedimentation + Fiber Ball Filtration

After Renovation

- Capacity: Q = 800 m³/h
- Daily Treatment Volume: 16,000 m³/d
- Process: Dense Media Rapid Settling + Disc Filtration

Effluent Quality

Inlet SS: 500–2950 mg/L
Outlet SS: 15 mg/L
Outlet COD: 20 mg/L
Turbidity: 3 NTU

BUSINESS AREA
WATER TREATMENT ENGINEERING

Mine Water Treatment

Water Quality Characteristics:

High-salinity industrial wastewater contains a variety of substances, including salts, oils, organic matter, heavy metals, and radioactive materials. Common salts include NaCl,

wide range of organic and salt compounds with diverse chemical properties. Therefore, appropriate treatment processes must be selected based on the specific characteristics of the wastewater.

Industrial Wastewater Treatment and Zero Liquid Discharge (ZLD)

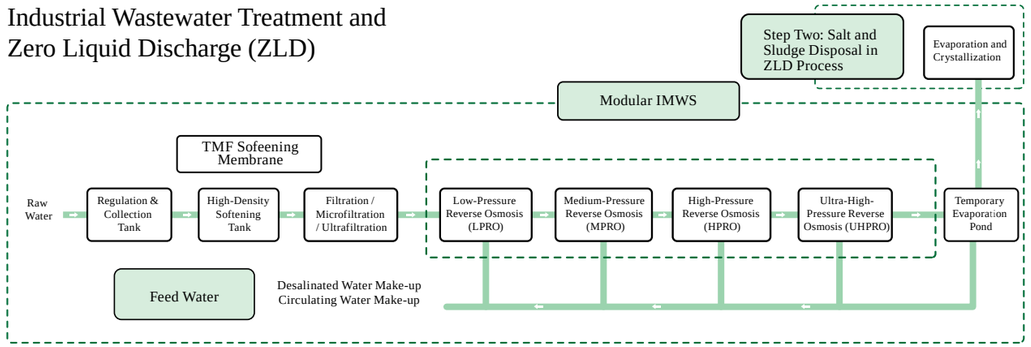

Zero Liquid Discharge (ZLD) of Coal Chemical Wastewater

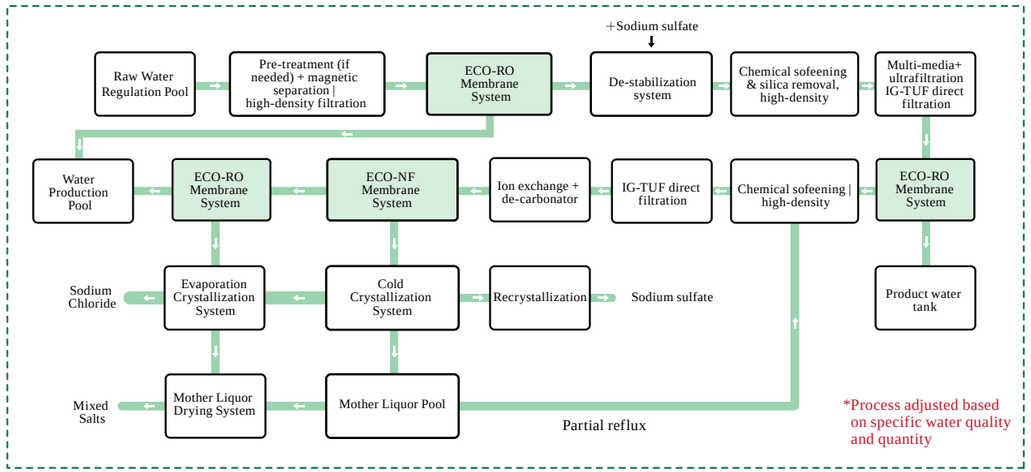

SELECTED PROJECT CASES

Household Waste Harmless Treatment and Incineration Wastewater Treatment, Huyi District, Xi'an

Capacity: 1000 t/d
Process: Flocculation & Sedimentation + Multi-Media Filter + Ultrafiltration + Reverse Osmosis + DTRO

Industrial Wastewater Advanced Treatment for Shendong Dianta 660MW Unit

System: Industrial Wastewater Advanced Treatment System
Capacity: 130 t/h
Process: Ultrafiltration + Reverse Osmosis

China Shipbuilding Industry Corporation Urat Middle Banner Solar Thermal Power Project

Zero Liquid Discharge Wastewater Treatment System
Capacity: 10 t/h
Process: Chemical Sofeening + TMF + Single-Stage Reverse Osmosis + Brine RO

Phase II Project of Xiamen Eastern Waste Incineration Power Plant

Production Wastewater Reuse Treatment System
Capacity: 2×30 t/h
Process: Mechanically Accelerated Clarifier + Multi-Media Filter + Ultrafiltration + Reverse Osmosis

Shenhua Shendong Electric Power Co., Ltd.

Urat Middle Banner Thermal Power Plant
Capacity: 30 t/h
Process: Lime Softening + Multi-Media Filter + Ultrafiltration + Mixed-Bed + Cation Bed +First-Stage Reverse Osmosis + Second-Stage Reverse Osmosis

Partial Cooperation Projects

Industrial Water Supply Treatment			
Abroad、Green Hydrogen Industry			
No.	**Project Name**	**Project Nature**	**Remarks**
1	China Tianchen Engineering Corparetion EuroChem Chemical Complex Project -SAP Project Demineralized and Industrial Water Station and sand filter	Multimedia Filter+Activated Carbon Filter+Double-stage RO+EDI	, 20ug/L,
2		Flocculation Inclined Plate SedimentC8	, ,
3			Conductivity＜ , SiO2＜0.02mg/L, Oil＜1mg/L
4			
5			, ,
6			,
7			Conductivity＜ , SiO2＜10ug/L
8			,
9			,
10			, Total ,
11			Conductivity ( ) : ,
12			Conductivity ( ) : ,
13			,
14			
15			; 0.02mg/L; ;
16			Conductivity＜ ; SiO2＜10ug/L; umol/L

Partial Cooperation Projects

Industrial Water Supply Treatment			
Power Industry			
No.	Project Name	Project Nature	Remarks
Petrochemical, Metallurgy, and Coking Industries			
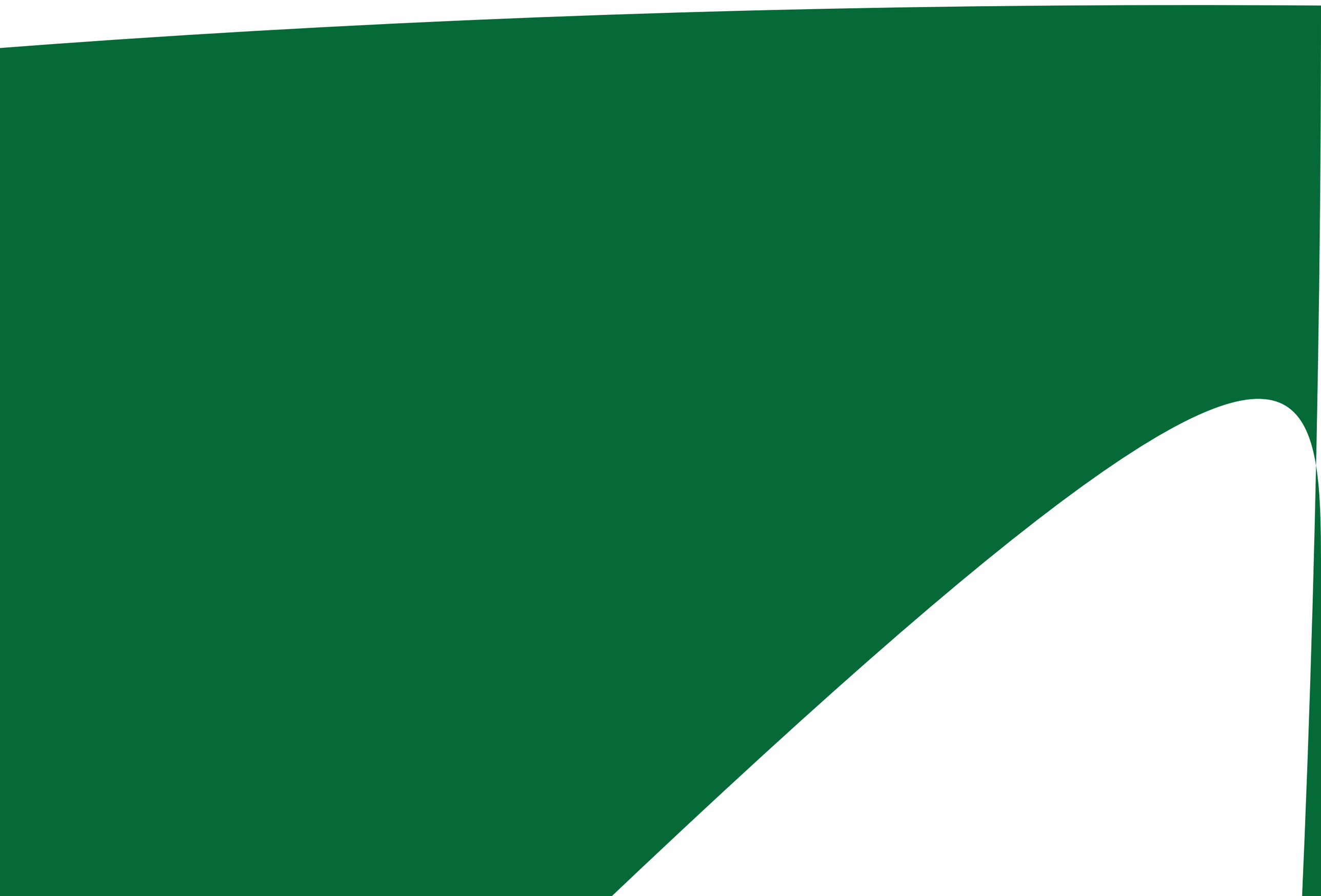
	Pangang Vanadium and Titanium Active Branch 100 MW Waste Heat and Energy Utilization Power Generation Boiler Makeup Water Treatment System	First-stage RO + Second-stage RO	
		Filter+ First-stage RO + Mixed Bed	
		Ozone Oxidation + CoagulationSedimen-tation (Hardness Removal)+ Filtration + Ultrafiltration +Reverse Osmosis	
			-
			WaterQuality: "GB5749-2006DrinkingWater Standards"
			WaterQuality:"GB5749-2006DrinkingWater Standards"
			WaterQuality:"GB5749-2006DrinkingWater Standards"
			WaterQuality:"GB5749-2006DrinkingWater Standards"
			WaterQuality:UrbanSewageReuse-Urban MiscellaneousWaterQuality
			Product Water Quality: Drinking Water Sanitary Standards
			WaterQuality:"GB5749-2006DrinkingWater Standards"
			ProductWaterQuality:DesalinationRate>97%
			Purpose:TapWaterQualityUpgrading
			1000mg/L
			1000mg/L
			Product Water Quality: Resistivity > 5 MQ.cm;
			Product Water Quality:
			Product Water Quality: Urban Sewage ReuseIndustrial Water Quality